POWER SUPPLY (100/100G) 1/2

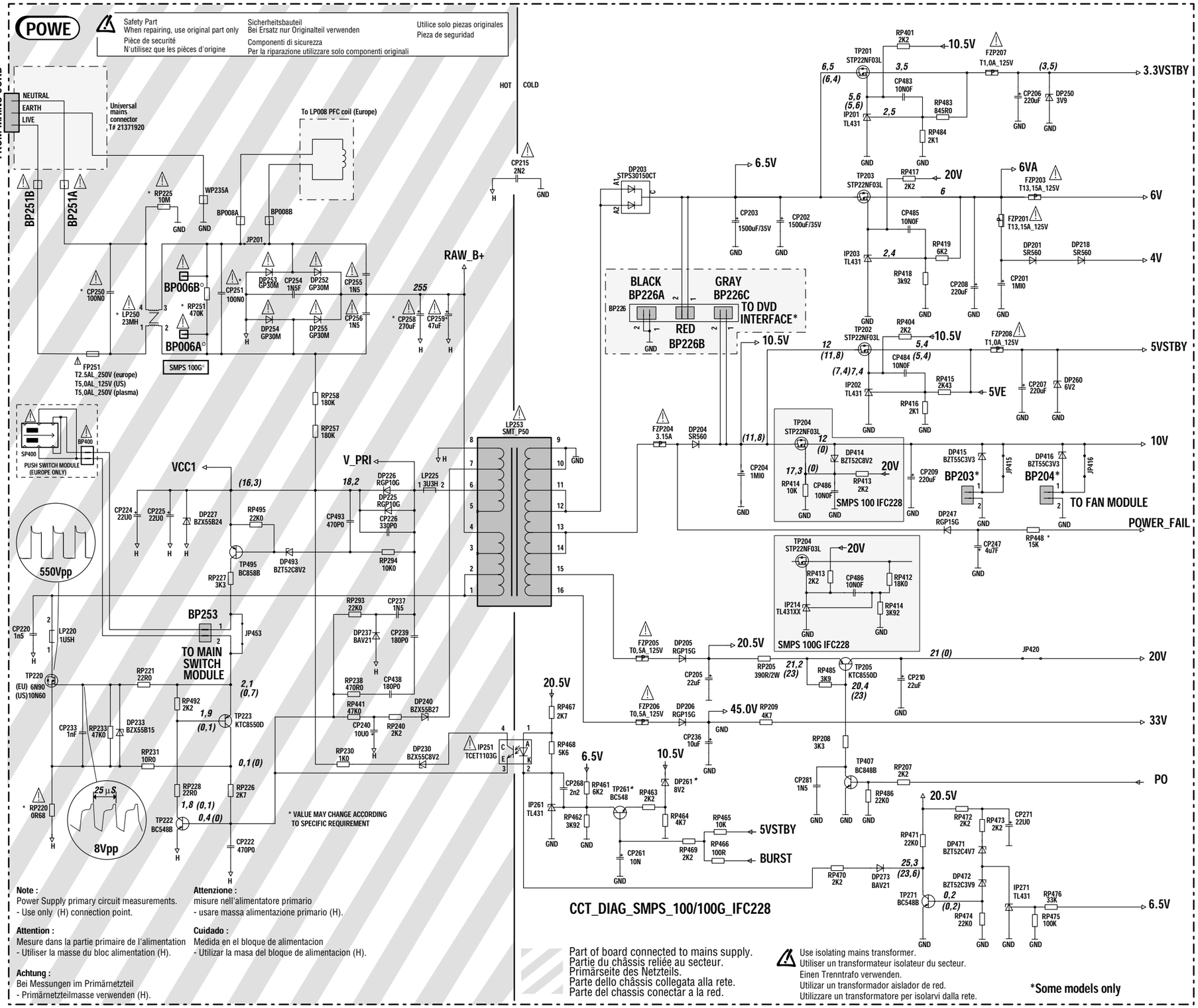

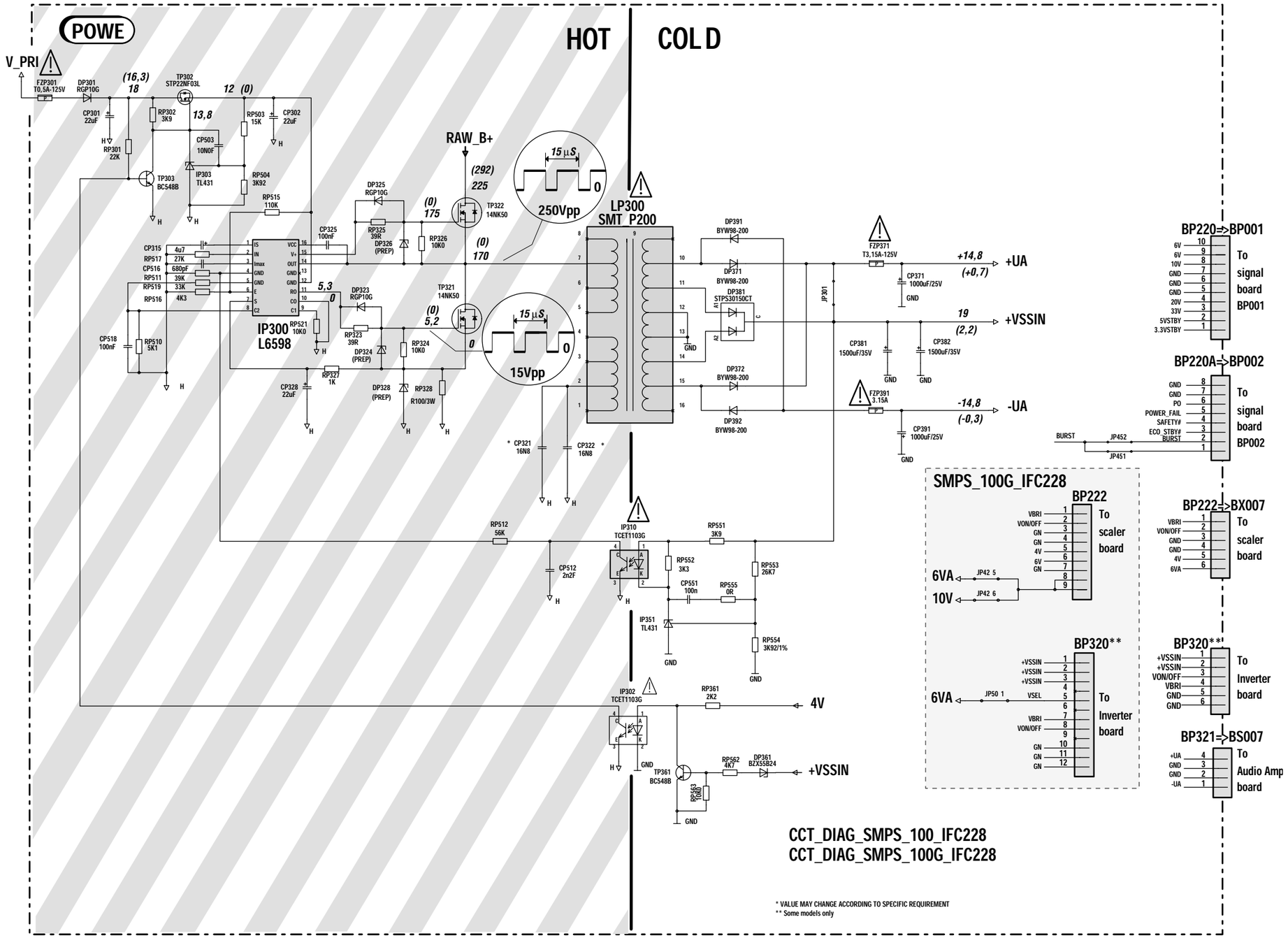
POWE
HOT
COLD
V_PRI
FZP301 T0,5A-125V
DP301 RGP10G
(16,3) 18
TP302 STP22NF03L
12 (0)
CP301 22uF
RP302 3K9
13,8
RP503 15K
CP302 22uF
RP301 22K
CP503 10N0F
TP303 BC548B
IP303 TL431
RP504 3K92
RP515 110K
RAW_B+
(292) 225
15 µS
250Vpp
DP325 RGP10G
(0) 175
TP322 14NK50
LP300 SMT_P200
CP325 100nF
RP325 39R
DP326 (PREP)
RP326 10K0
(0) 170
CP315 4u7
RP517 27K
CP516 680pF
RP511 39K
RP519 33K
RP516 4K3
5,3
DP323 RGP10G
TP321 14NK50
(0) 5,2
IP300 L6598
RP521 10K0
RP323 39R
DP324 (PREP)
RP324 10K0
15 µS
15Vpp
CP518 100nF
RP510 5K1
RP327 1K
CP328 22uF
DP328 (PREP)
RP328 R100/3W
* CP321 16N8
CP322 16N8 *
DP391 BYW98-200
DP371 BYW98-200
DP381 STPS30150CT
DP372 BYW98-200
DP392 BYW98-200
FZP371 T3,15A-125V
FZP391 3,15A
CP371 1000uF/25V
CP381 1500uF/35V
CP382 1500uF/35V
CP391 1000uF/25V
JP301
+14,8 (+0,7)
+UA
19 (2,2)
+VSSIN
-14,8 (-0,3)
-UA
BP220=>BP001
To signal board BP001
BP220A=>BP002
To signal board BP002
BURST
JP452
JP451
SMPS_100G_IFC228
BP222
To scaler board
6VA
10V
JP42 5
JP42 6
BP222=>BX007
To scaler board
BP320**
To Inverter board
JP50 1
BP320**
To Inverter board
BP321=>BS007
To Audio Amp board
RP512 56K
CP512 2n2F
IP310 TCET1103G
RP551 3K9
RP552 3K3
CP551 100n
RP555 0R
RP553 26K7
IP351 TL431
RP554 3K92/1%
IP302 TCET1103G
RP361 2K2
4V
TP361 BC548B
RP562 4K7
DP361 BZX55B24
+VSSIN
RP563 1K0
CCT_DIAG_SMPS_100_IFC228
CCT_DIAG_SMPS_100G_IFC228
* VALUE MAY CHANGE ACCORDING TO SPECIFIC REQUIREMENT
** Some models only